Developmental Models

Nathan Gillespie & Brad Verhulst

Thu Mar 10, 2016 1:30pm – 3pm Mountain Time

VCU Virginia Institute for Psychiatric and Behavioral Genetics

Why run longitudinal models?

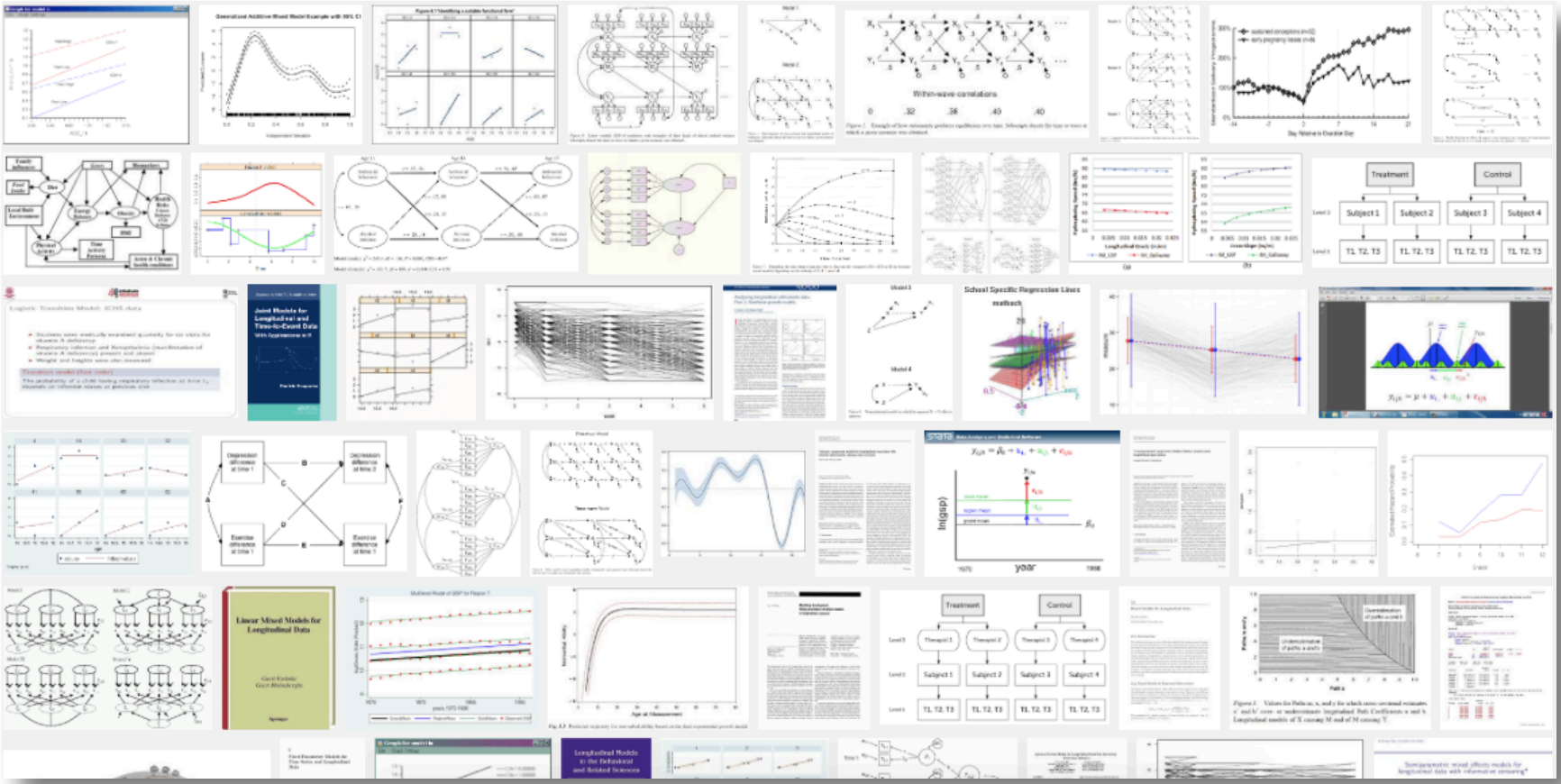

Why run longitudinal models?

Map changes in the magnitude of genetic & environmental influence across time

ID enduring versus time dependent genetic or environmental risks

Improve power to detect A, C & E

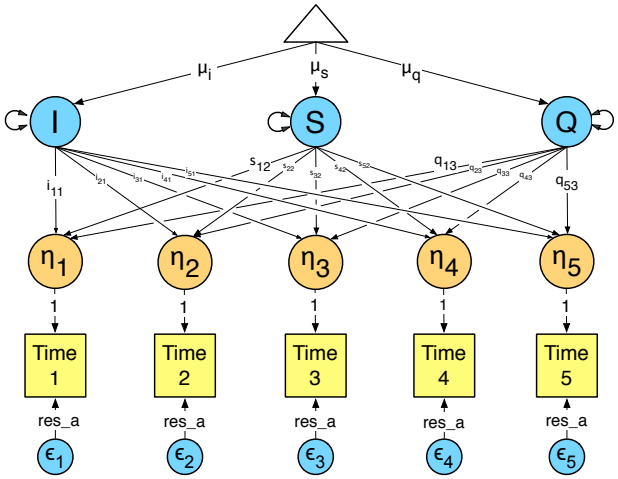

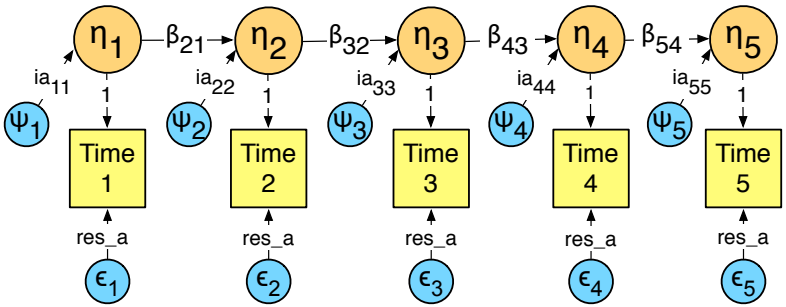

Various models for analysing longitudinal data

1. Cholesky Decomposition
2. Latent growth curve model
3. Auto-regression model
4. Dual Change Score model

Models imply that you look at your variance-covariance matrix & have a theory about the nature of change

1

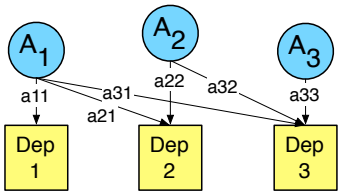

2

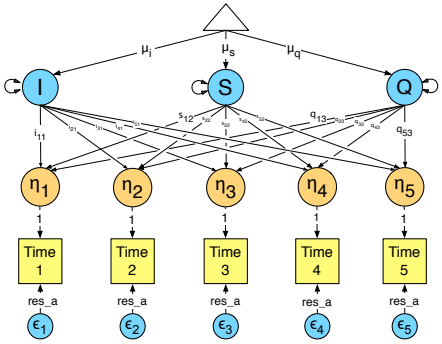

3

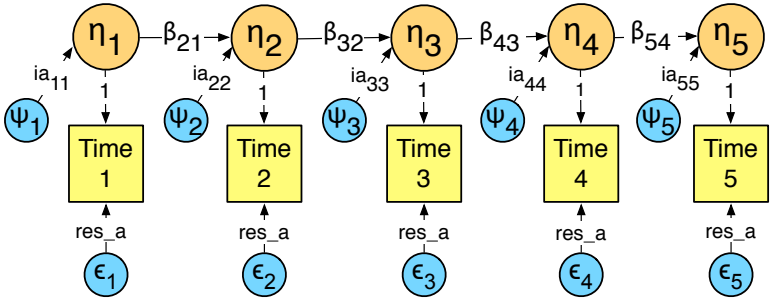

Atheoretical longitudinal model

1. Cholesky Decomposition

Advantages

- logical: organized such that all factors are constrained to impact later, but not earlier time points
- requires few assumptions: can predict any pattern of change

Disadvantages

- atheoretical: no explicit hypothesis of change. Describes patterns of change without accounting for them in terms of one or more simpler and, potentially more informative theoretical possibilities

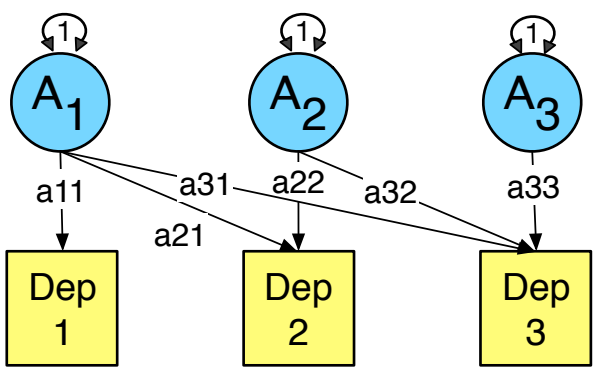

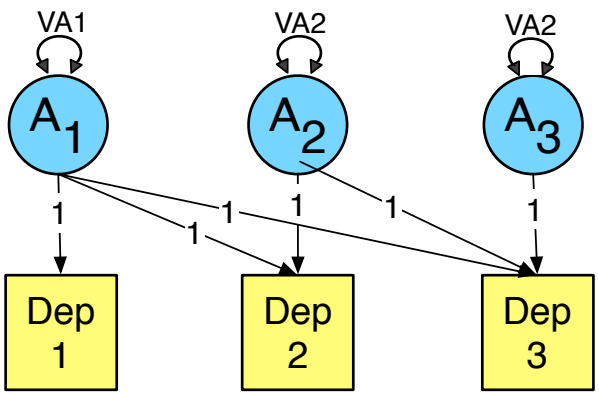

Theoretical longitudinal models
After inspecting your observed variances-covariances in your repeated measures:

1. **UNFOLDING** Individual genetic and/or environmental differences in inherent growth patterns with age **- Latent growth curve effects**

2. **ACCUMULATION** of individual genetic and/or environmental differences, which are more of less persistent **- Autoregressive effects**

3. Latent growth curve model + Auto-regression model ("**Dual Change Score model**:")

Regardless of model - MIND YOUR DATA

1. Latent growth curve model

AKA "*random regression*", "*hierarchial mixed*" or "*latent growth curve*" models"

What does the LGC model predict?

Let's assume we have three longitudinal measures…

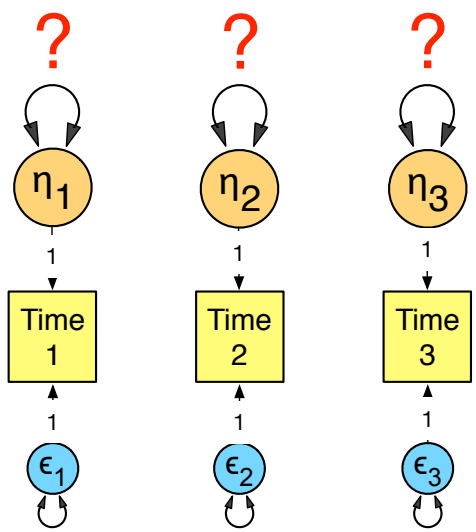

#1. Variation in latent true scores at each time point ($Eta_{1\text{-}3}$) is a function of what you begin with in terms of individual genetic and environmental differences….

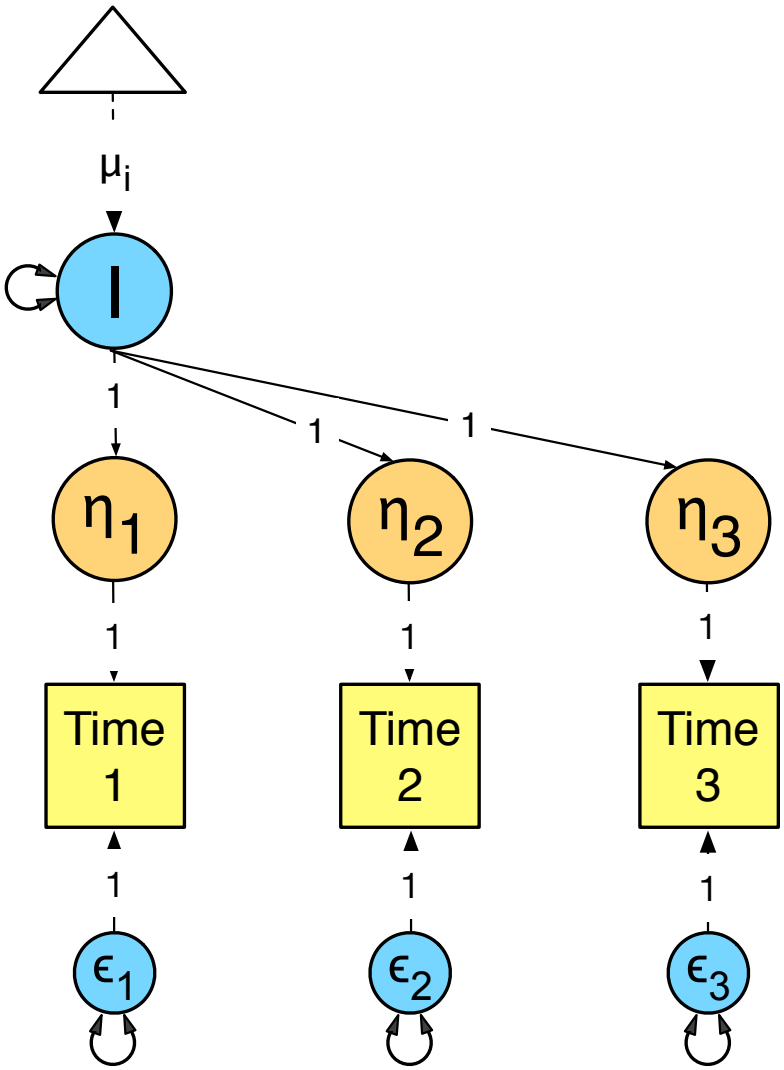

#2. Variation in latent true scores ($Eta_{1\text{-}3}$) at each time point is also a function of **UNFOLDING/EXPANSION/CHANGE** individual genetic and environmental differences over time

Change may involve linear or non-linear rates of change

S = Linear slope

Or

Q = Quadratic slope

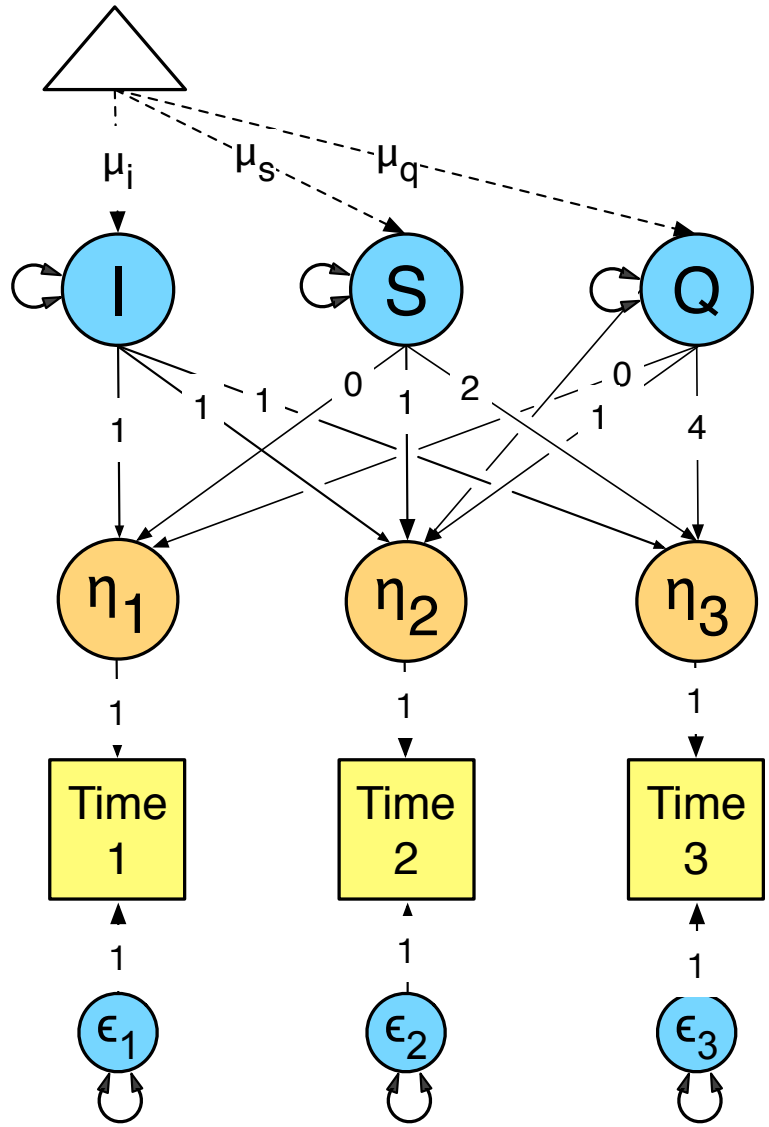

Latent growth modelling

Developmental change = **UNFOLDING** of inherent, random genetic & environmental differences in the level & rates of change in behaviour over time

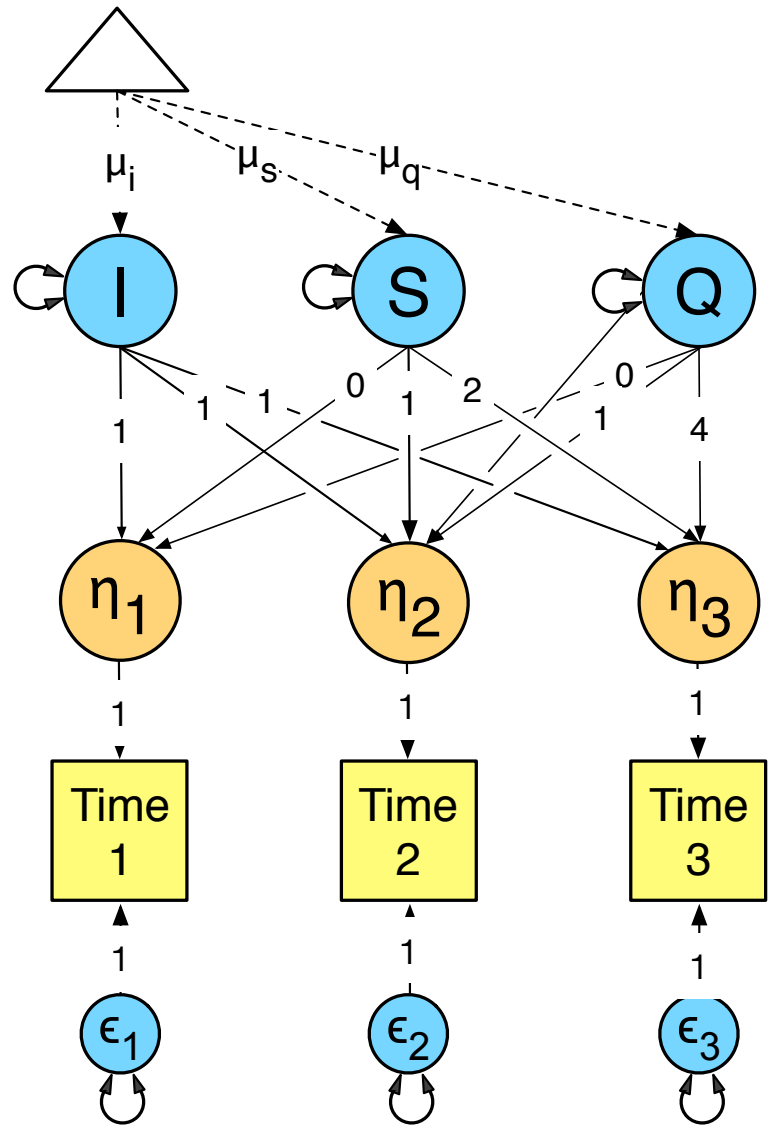

Special case **Factor Model:**
Factor loadings from intercept (I) and change factors (S & Q) are functions of coefficients

Coefficients = *a priori* contrasts on the levels of age at which the repeated measures are taken

Orthonomal contrasts

How to specify Latent Growth Curve? Look at the Common Pathway Model

$$\begin{bmatrix} f1 \\ f2 \\ f3 \end{bmatrix} \quad \& \quad [VA] \quad + \quad \begin{bmatrix} VAres1 & & \\ & VAres2 & \\ & & VAres3 \end{bmatrix}$$

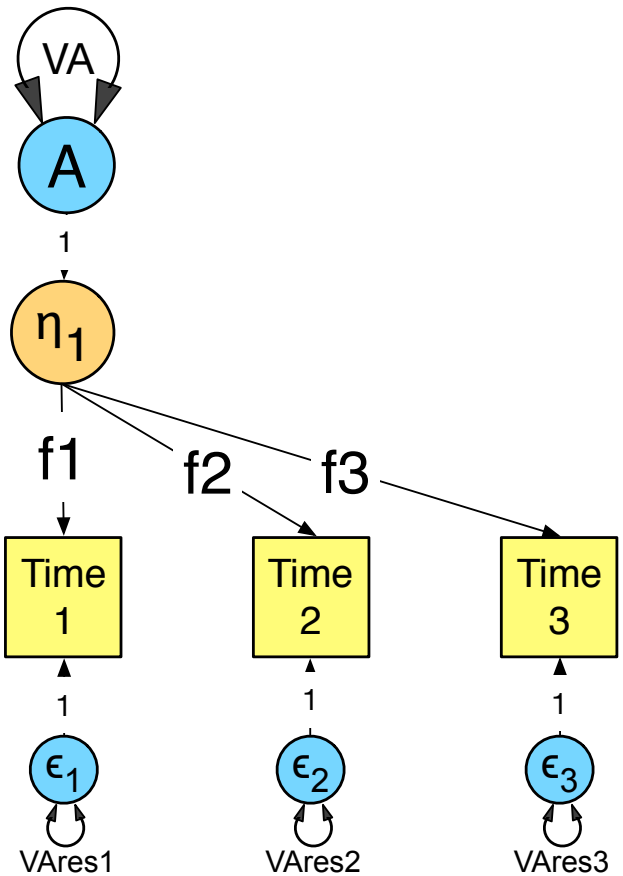

 # Expected genetic variance

VA <- mxMatrix(type = "Symm", nrow = nFactors, ncol = nFactors, free = T, labels = "VA", values = 0.5, name = "VA")

 # Factor loading matrix

F <- mxMatrix(type = "Full", nrow = nvars, ncol = nFactors, free = T, labels = c("**f1**","**f2**","**f3**"), values = c(0.5,0.3,0.4), name = "F")

 # Residual variance

Ares <- mxMatrix(type = "Diag", nrow = nvars, ncol = nvars, free = T, labels = c("**VAres1**","**VAres3**","**VAres3**"), values = c(0.3,0.2,0.1), name = "Ares")

 # Expected variance

mxAlgebra(expression = **F** %&% **VA** + **Ares**, name = "**A**")

Estimate the C variance / covariance

$$\begin{bmatrix} f1 \\ f2 \\ f3 \end{bmatrix} \quad \& \quad [VC] \quad + \quad \begin{bmatrix} VCres1 & & \\ & VCres2 & \\ & & VCres3 \end{bmatrix}$$

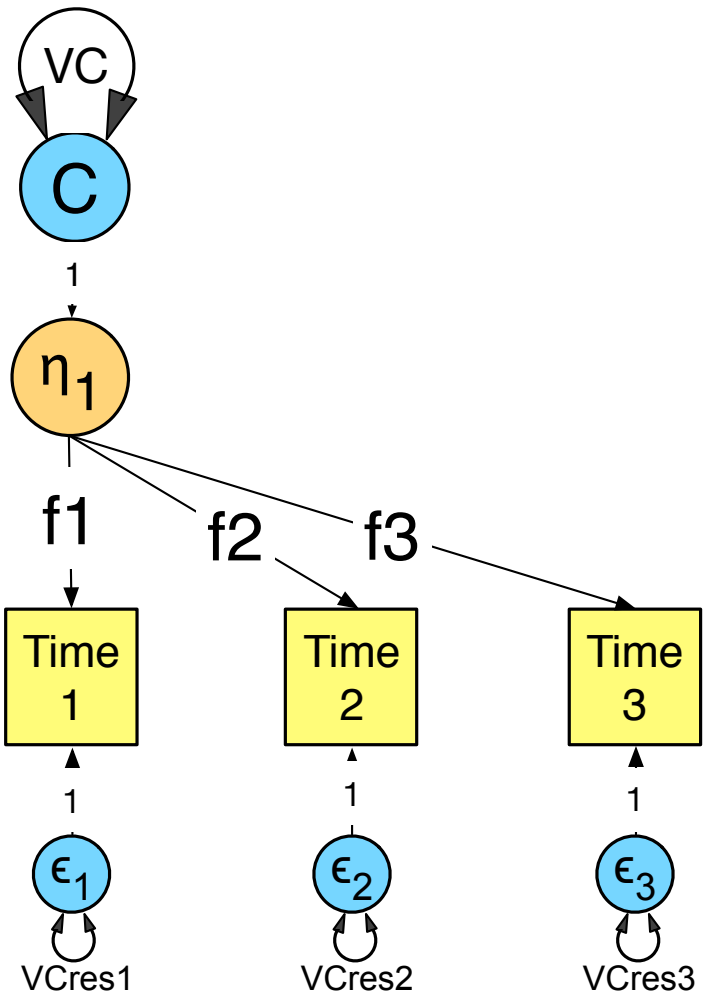

 # Expected common env' variance
VC <- mxMatrix(type = "Symm", nrow = nFactors, ncol = nFactors, free = T, labels = "**VC**", values = 0.5, name = "VC")

 # Factor loading matrix
F <- mxMatrix(type = "Full", nrow = nvars, ncol = nFactors, free = T, labels = c("**f1**","**f2**","**f3**"), values = c(0.5, 0.5,0.5), name = "F")

 # Residual common env' variance
Cres <- mxMatrix(type = "Diag", nrow = nvars, ncol = nvars, free = T, labels = c("**VCres1**","**VCres3**","**VCres3**"), values = c(0.3, 0.4, 0.5), name = " **Cres** ")

 # Expected common env' variance
mxAlgebra(expression = **F** %&% **VC** + **Cres**, name = "**C**")

A + C + E

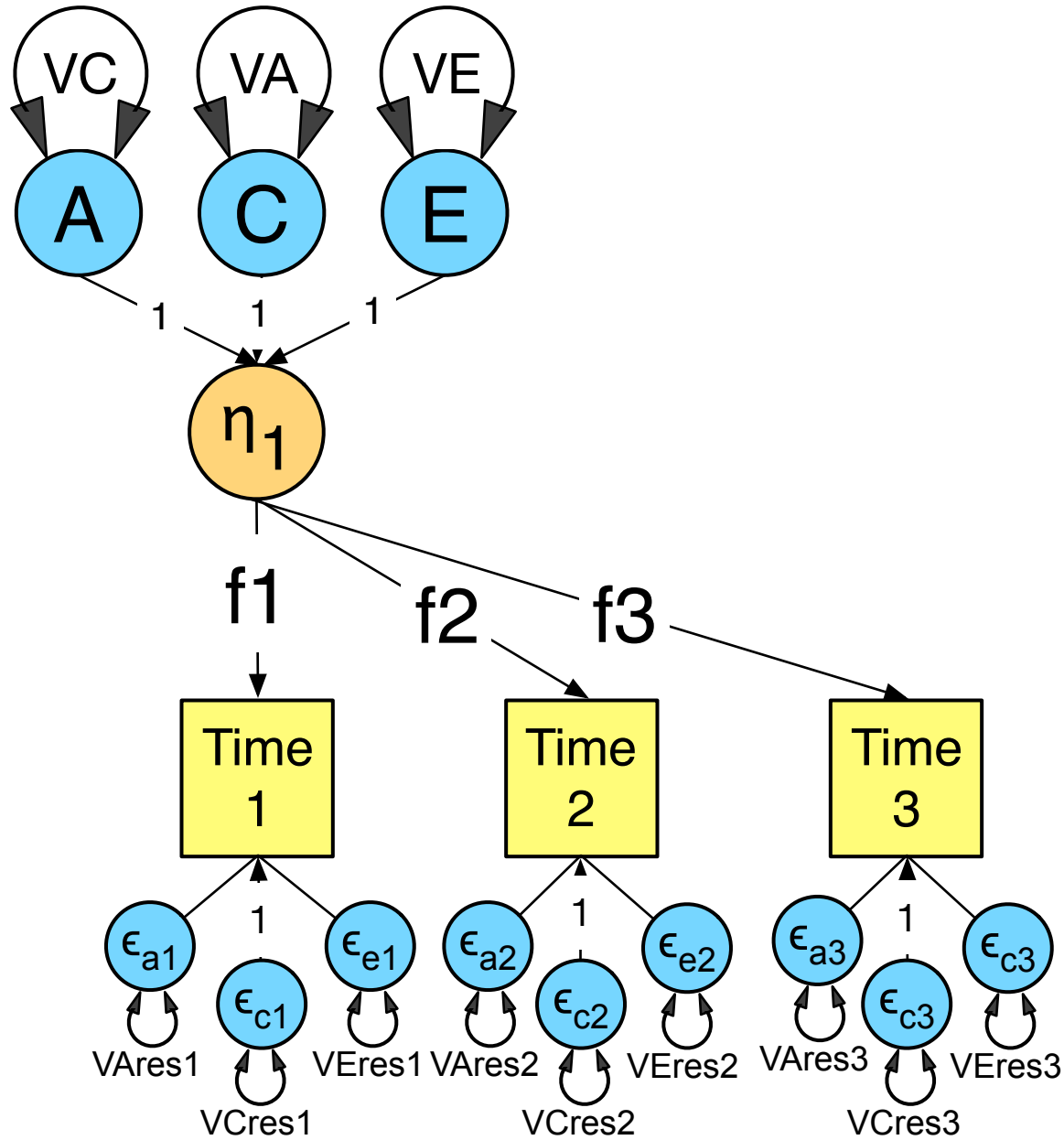
VC
VA
VE
A
C
E
1
1
1
η1
f1
f2
f3
Time 1
Time 2
Time 3
1
1
1
εa1
εc1
εe1
εa2
εc2
εe2
εa3
εc3
εc3
VAres1
VCres1
VEres1
VAres2
VCres2
VEres2
VAres3
VCres3
VEres3

Common Pathway Model (CPM)

```
covMZ      <- mxAlgebra( expression= rbind( cbind(A+C+E, A+C),
                                            cbind(  A+C, A+C+E)), name="expCovMZ" )
covDZ      <- mxAlgebra( expression= rbind( cbind(    A+C+E, 0.5%x%A+C),
                                            cbind(0.5%x%A+C, A+C+E)), name="expCovDZ" )
```

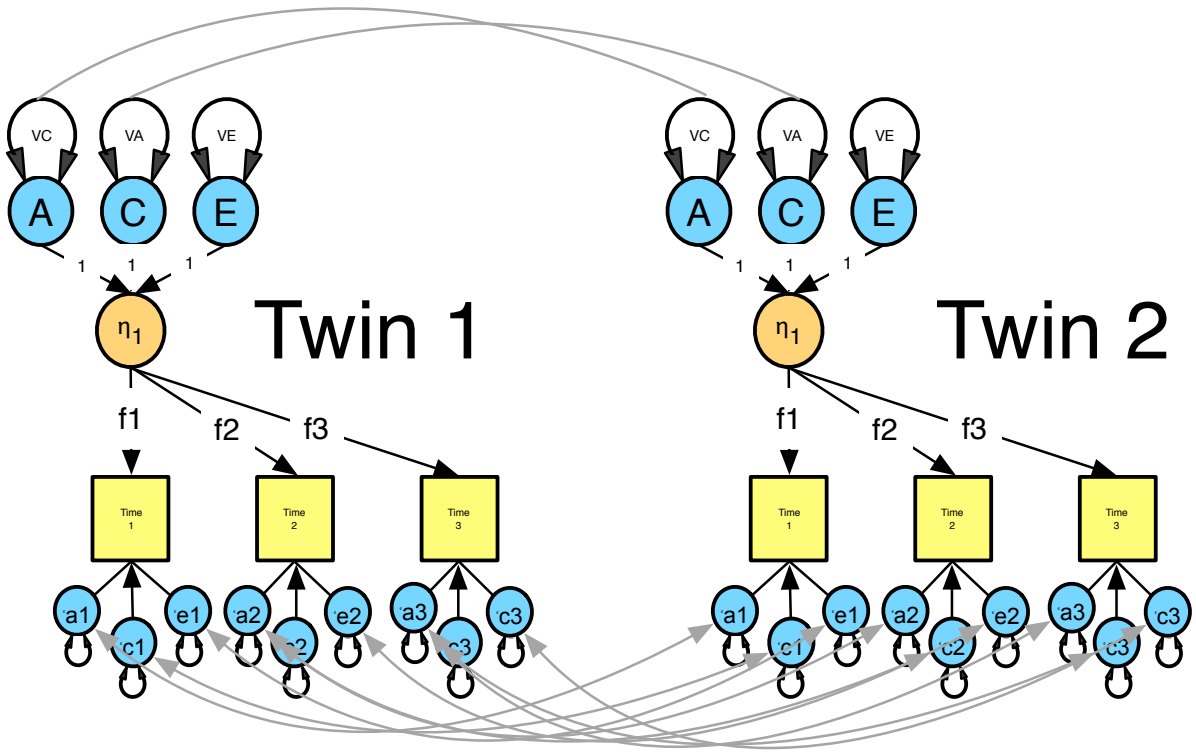

MZ

	Twin 1	Twin 2
Twin 1	A+C+E	A+C
Twin 2	A+C	A+C+E

DZ

	Twin 1	Twin 2
Twin 1	A+C+E	1/2A +C
Twin 2	1/2A +C	A+C+E

Latent growth modelling

Just add another latent factor & fix the factor loadings

$$\begin{bmatrix} 1 & 0 \\ 1 & 1 \\ 1 & 2 \end{bmatrix} \& \begin{bmatrix} VAi & covAis \\ covAis & VAs \end{bmatrix} + \begin{bmatrix} VAres1 & & \\ & VAres2 & \\ & & VAres3 \end{bmatrix}$$

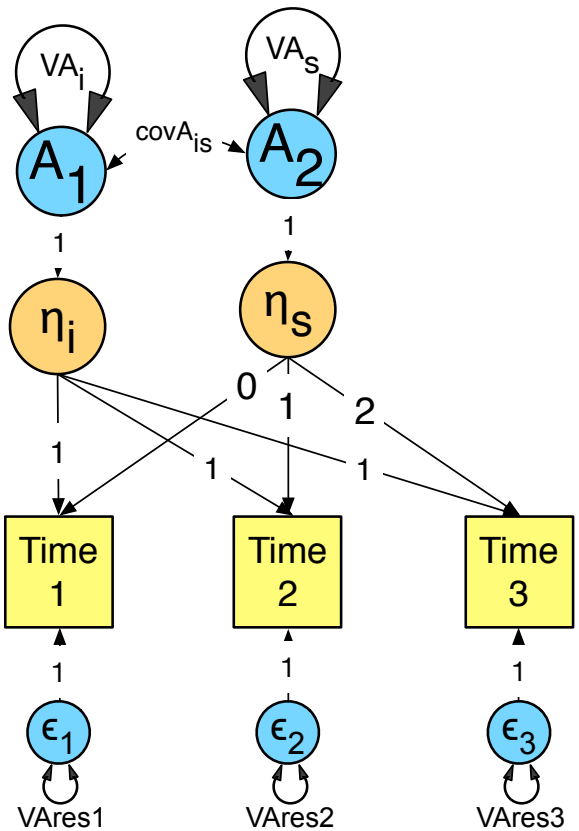

 # Expected genetic variance

VA <- mxMatrix(type = "Symm", nrow = 2, ncol = 2, free = T, labels = c("VAi",”covAis”,”covAis”), values = c(0.5,0.25,0.6), name = "VA")

 # Factor loading matrix

F <- mxMatrix(type = "Full", nrow = nvars, ncol = nFactors, free = T, labels = c("**f11**","**f21**","**f31**", "**f12**","**f22**","**f32**"), values = c(1,1,1, 0,1,2), name = "F")

 # Residual variance

Ares <- mxMatrix(type = "Diag", nrow = nvars, ncol = nvars, free = T, labels = c("**VAres1**","**VAres3**","**VAres3**"), values = 0.3, name = "Ares")

 # Expected variance

mxAlgebra(expression = **F** %&% **VA** + **Ares**, name = "**A**")

Latent growth modelling

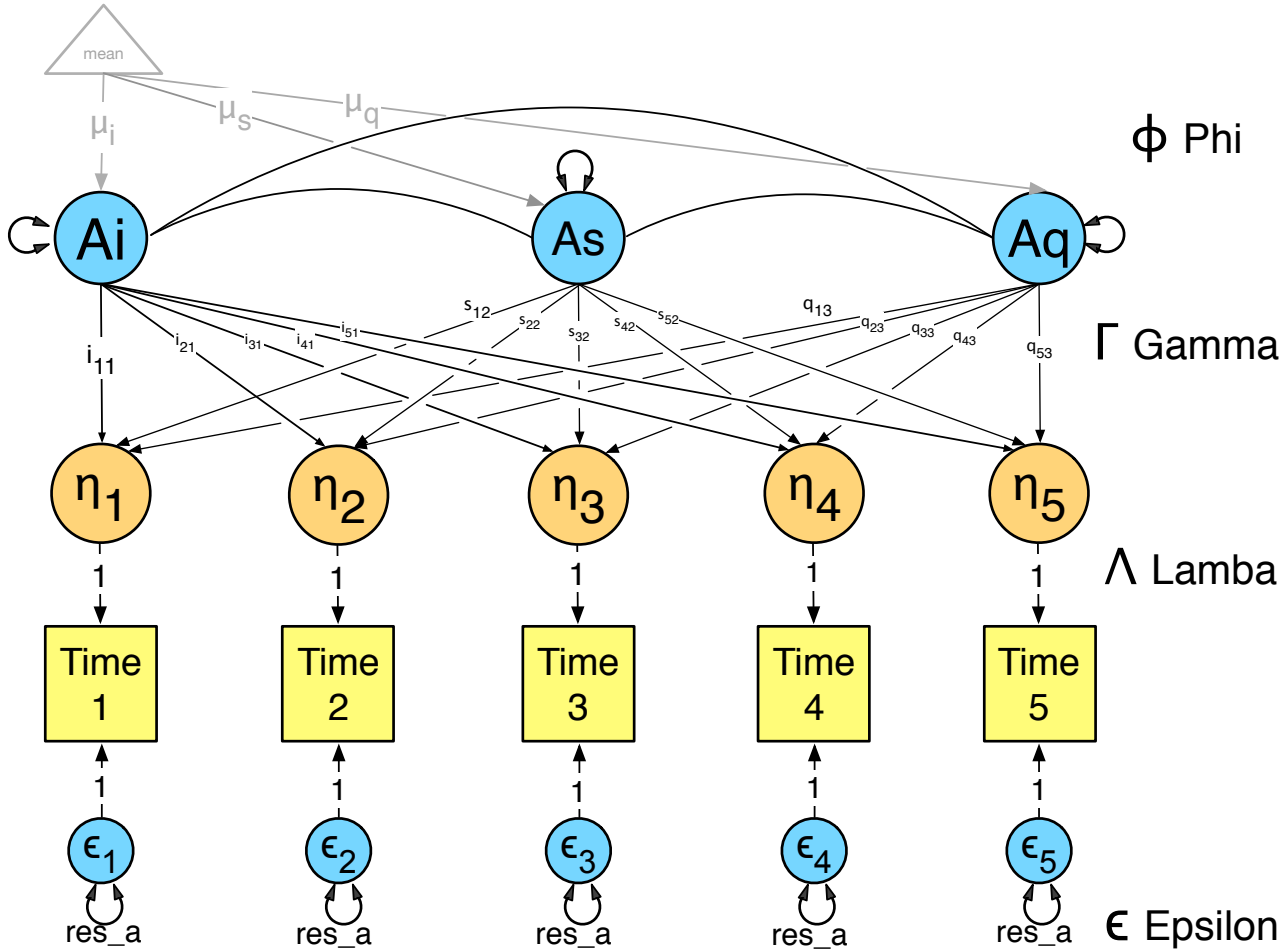

Twin Res. 2000 Sep;3(3):165-77.

Structured latent growth curves for twin data.

Neale MC[1], McArdle JJ.

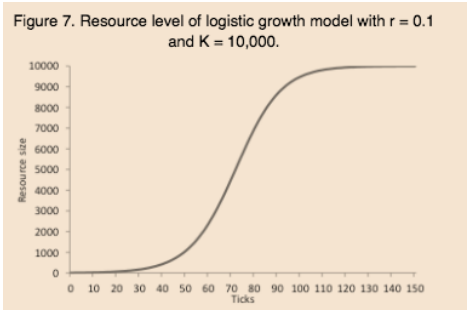

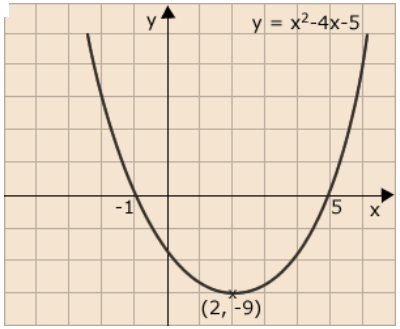

2. Auto-regression modelling

AKA "*simplex modelling*" or Lindon's "*Sh%t-St%cks model*"

Example means

t1_1	t1_2	t1_3	t1_4	t1_5
0.0026	1.3774	3.5220	5.8020	7.7550

Example covariation matrix

	t1_1	t1_2	t1_3	t1_4	t1_5
t1_1	1.27	0.78	0.49	0.16	-0.08
t1_2	0.78	2.37	2.06	1.52	0.08
t1_3	0.49	2.06	3.95	3.59	2.45
t1_4	0.16	1.52	3.59	6.52	8.64
t1_5	-0.08	0.08	2.45	8.64	21.03

correlation matrix

	t1_1	t1_2	t1_3	t1_4	t1_5
t1_1	1.00	0.45	0.22	0.06	-0.02
t1_2	0.45	1.00	0.67	0.39	0.01
t1_3	0.22	0.67	1.00	0.71	0.27
t1_4	0.06	0.39	0.71	1.00	0.74
t1_5	-0.02	0.01	0.27	0.74	1.00

Cross-temporal correlations within subjects arise because time specific sources of individual differences are more or less persistent time, and may, **ACCUMULATE** during development.

Giving rise to a developmental increase in genetic and/or environmental variance, and increased correlations between adjacent measures

What are the sources of variation in the latent true score?

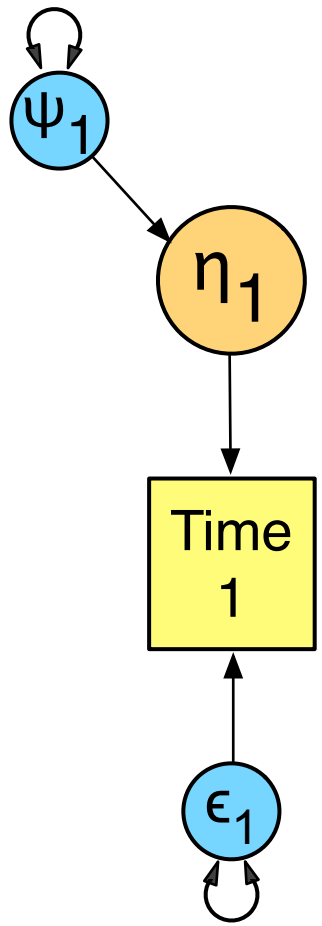

Auto-regression models

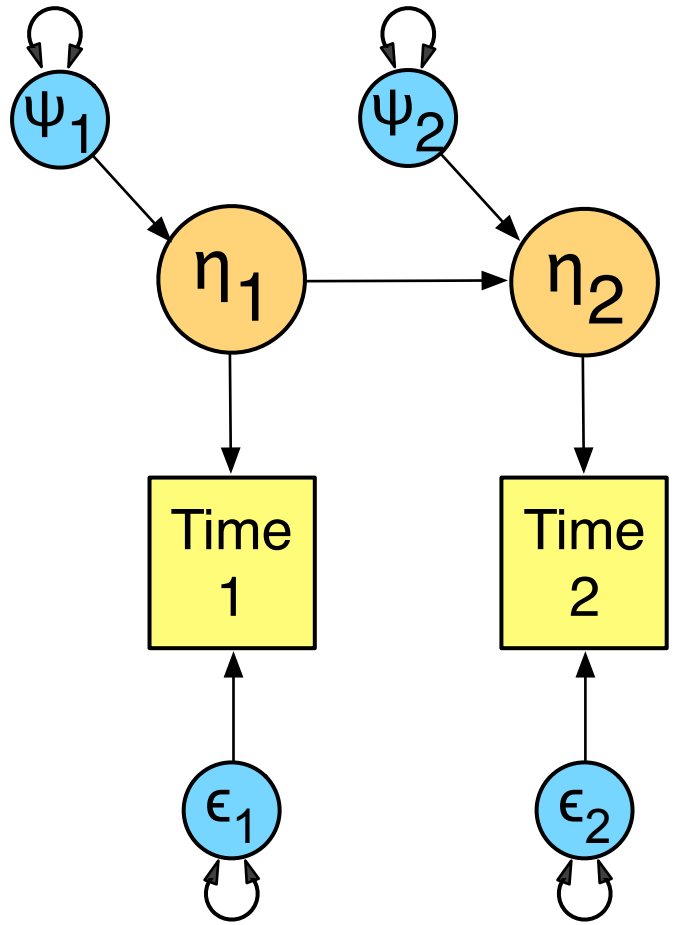

Auto-regression models

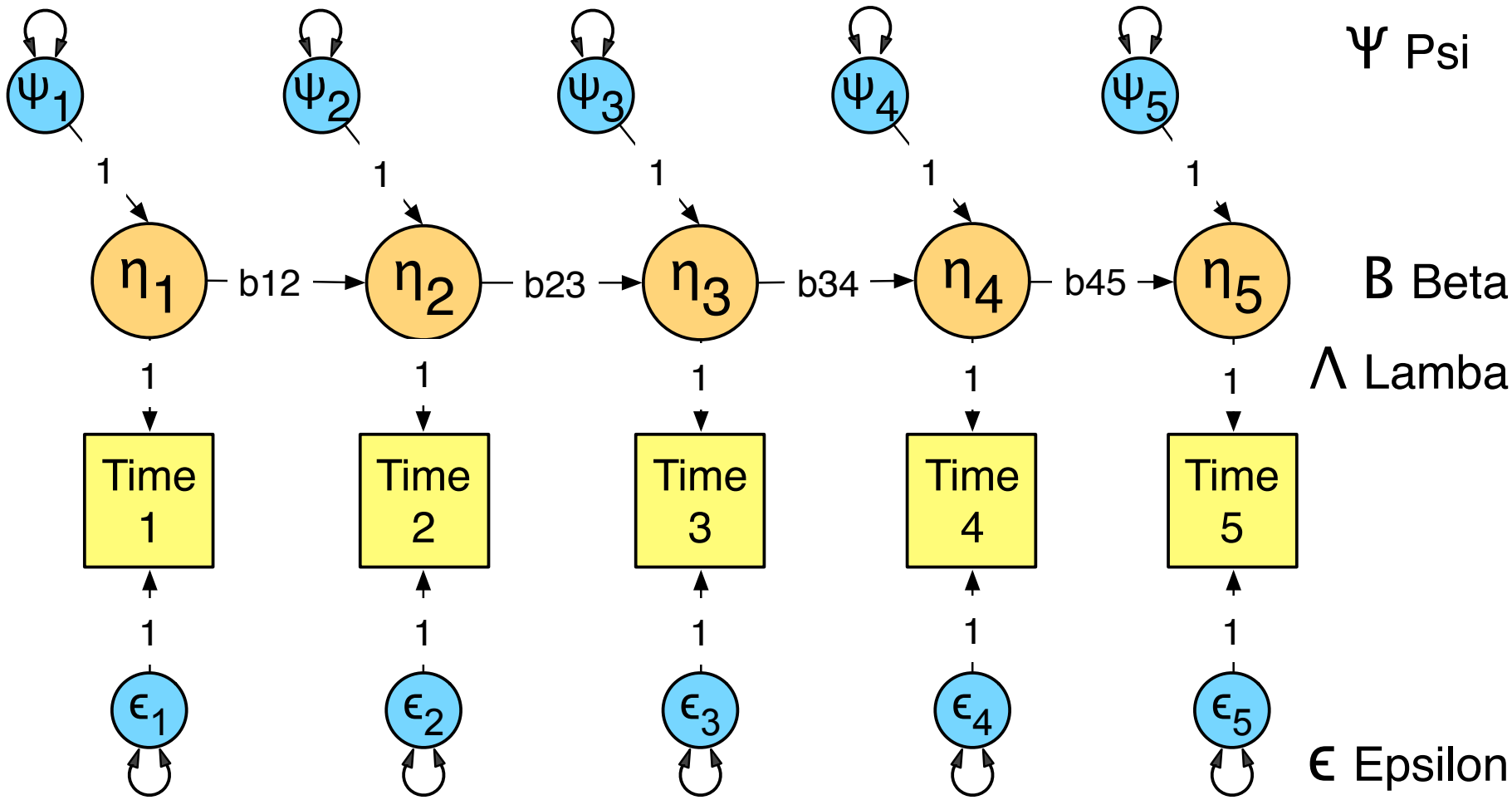

Enables partitioning of variation at each time point into:

- Transient genetic & environmental risks unique to each occasion
- Persistent, enduring genetic & environmental risk factors

Examples?

- Snow-ball
- Vocabulary acquisition
- Emotional baggage

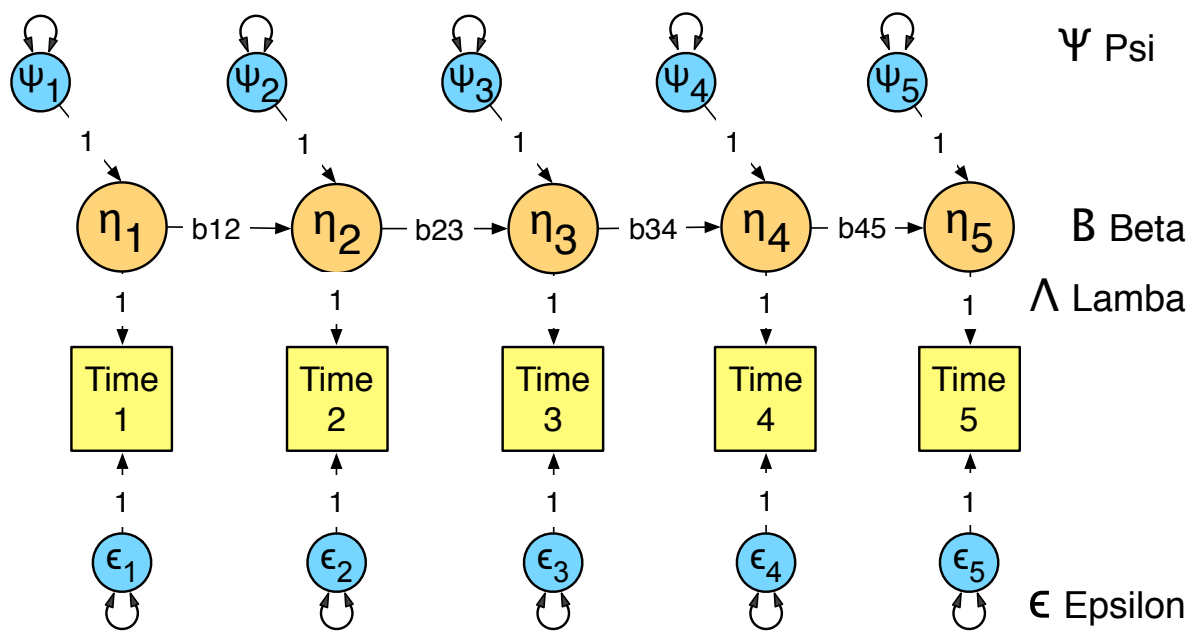

$$\left(\begin{bmatrix}1&0&0\\0&1&0\\0&0&1\end{bmatrix}-\begin{bmatrix}0&0&0\\\mathbf{b12}&0&0\\0&\mathbf{b23}&0\end{bmatrix}\right)^{-\mathbf{1}}\ \&\ \begin{bmatrix}\mathbf{VA\_i11}&&\\&\mathbf{VA\_i22}&\\&&\mathbf{VA\_i33}\end{bmatrix}+\begin{bmatrix}\mathbf{res\_a}&&\\&\mathbf{res\_a}&\\&&\mathbf{res\_a}\end{bmatrix}$$

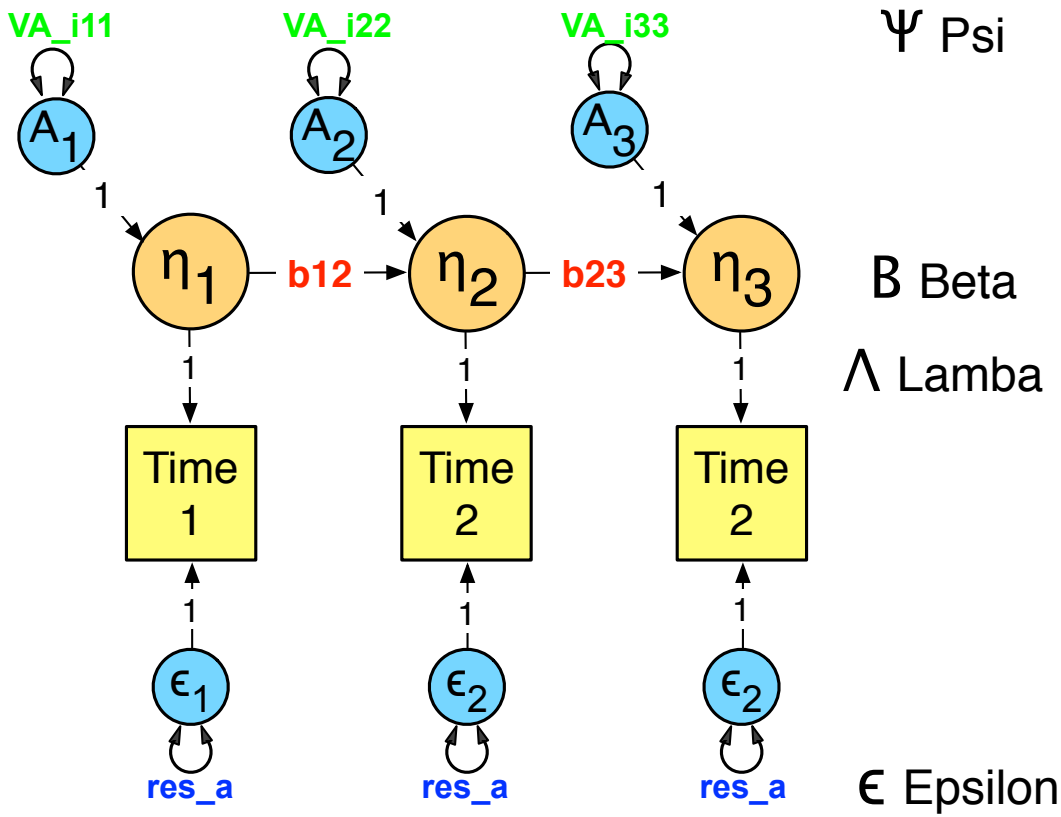

Ψ Psi

B Beta

Λ Lamba

ϵ Epsilon

```
A  <- mxAlgebra( solve(I-beta)
%&% (psiA) + epsilon_a,
name = "A")
```

Auto-regressive model examples

Female Neuroticism

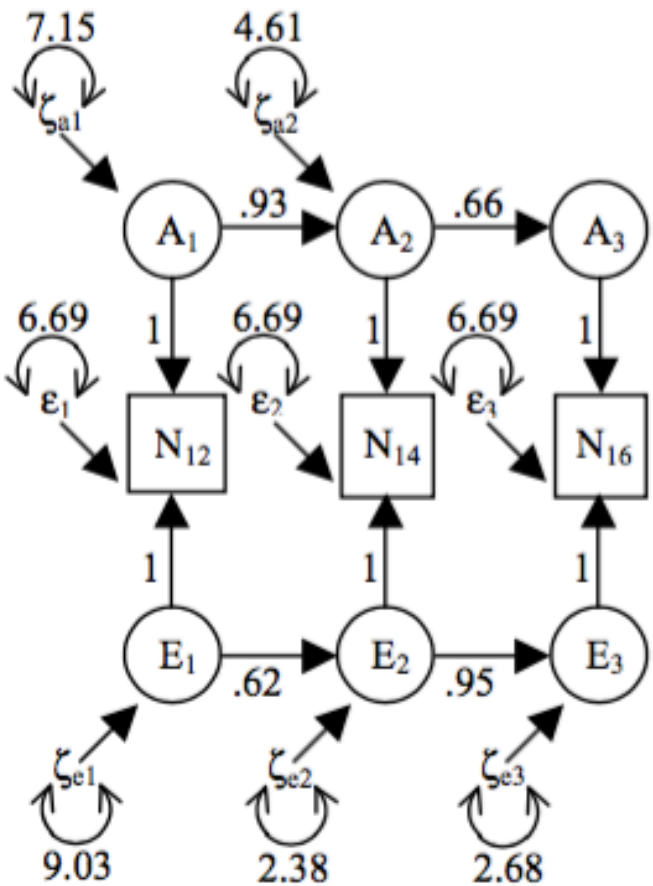

Male Neuroticism

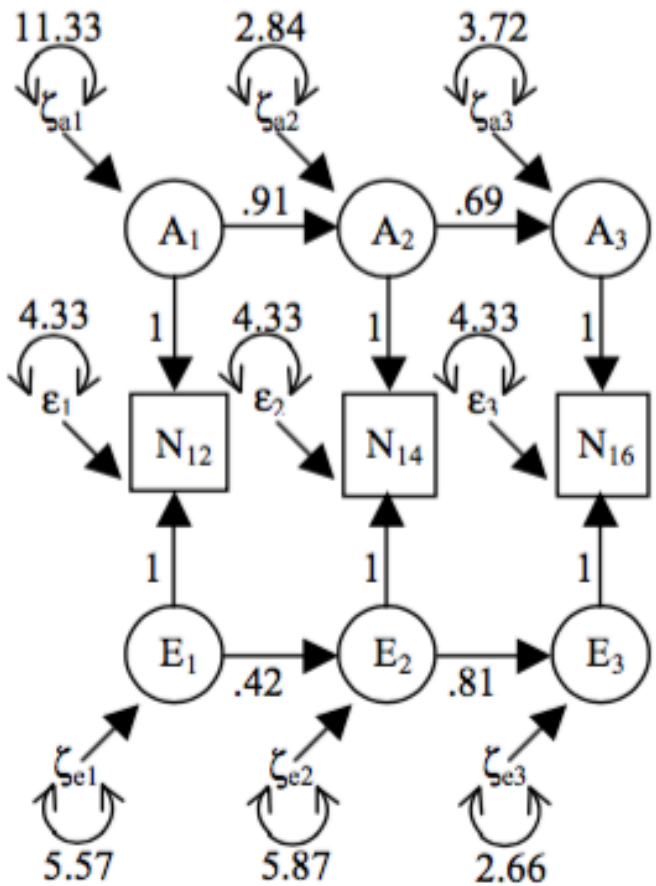

More auto-regressive model examples…

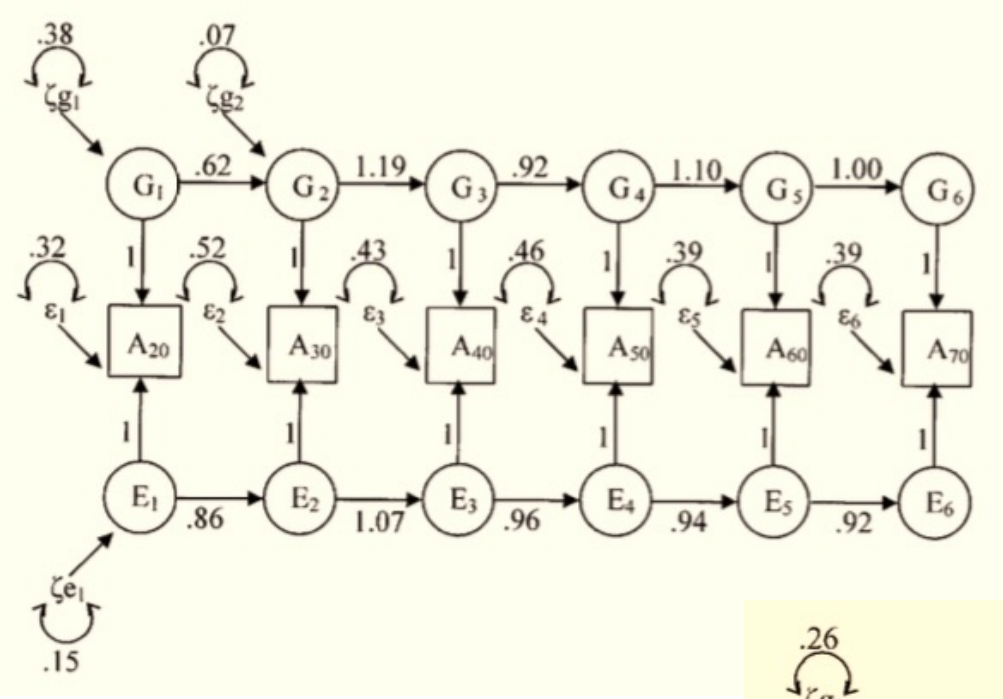

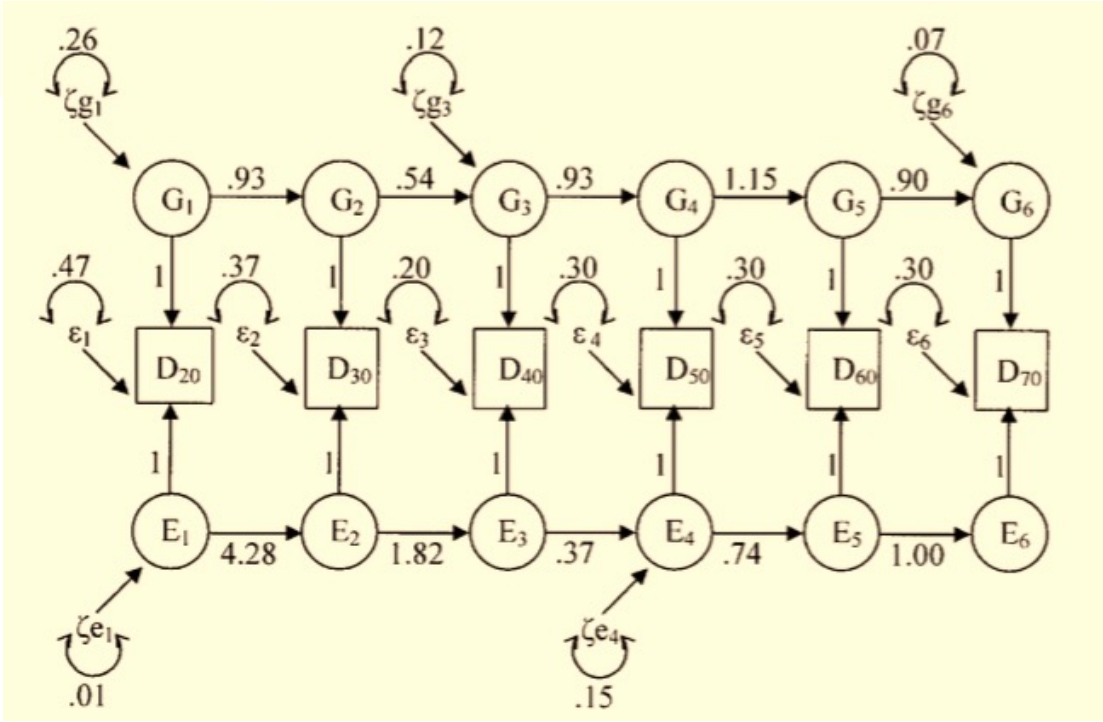

Dual Change Score model

Latent growth curve model + Auto-regression model

Behav Genet. 1986 Jan;16(1):143-62.

A theory of developmental change in quantitative phenotypes applied to cognitive development.

Eaves LJ, Long J, Heath AC.

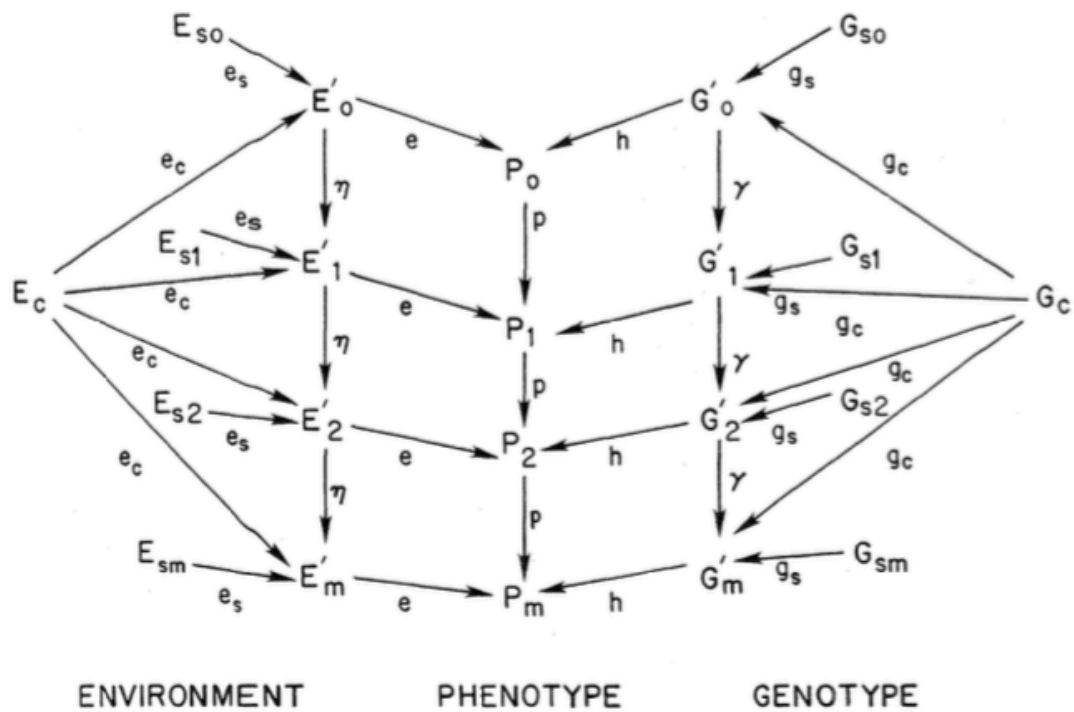

Fig. 1. Model for longitudinal measures of a continuous trait.

Dual Change Score model

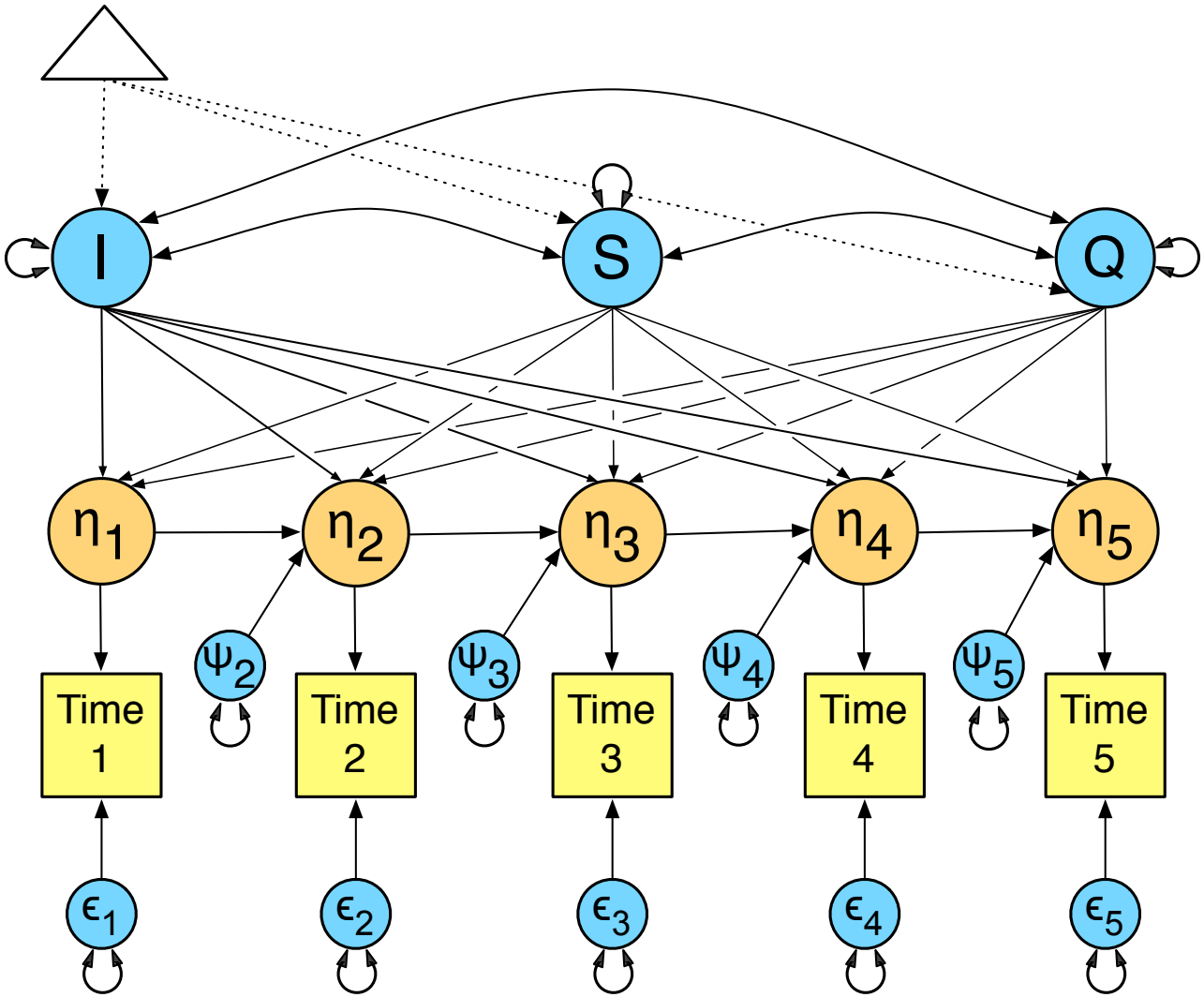

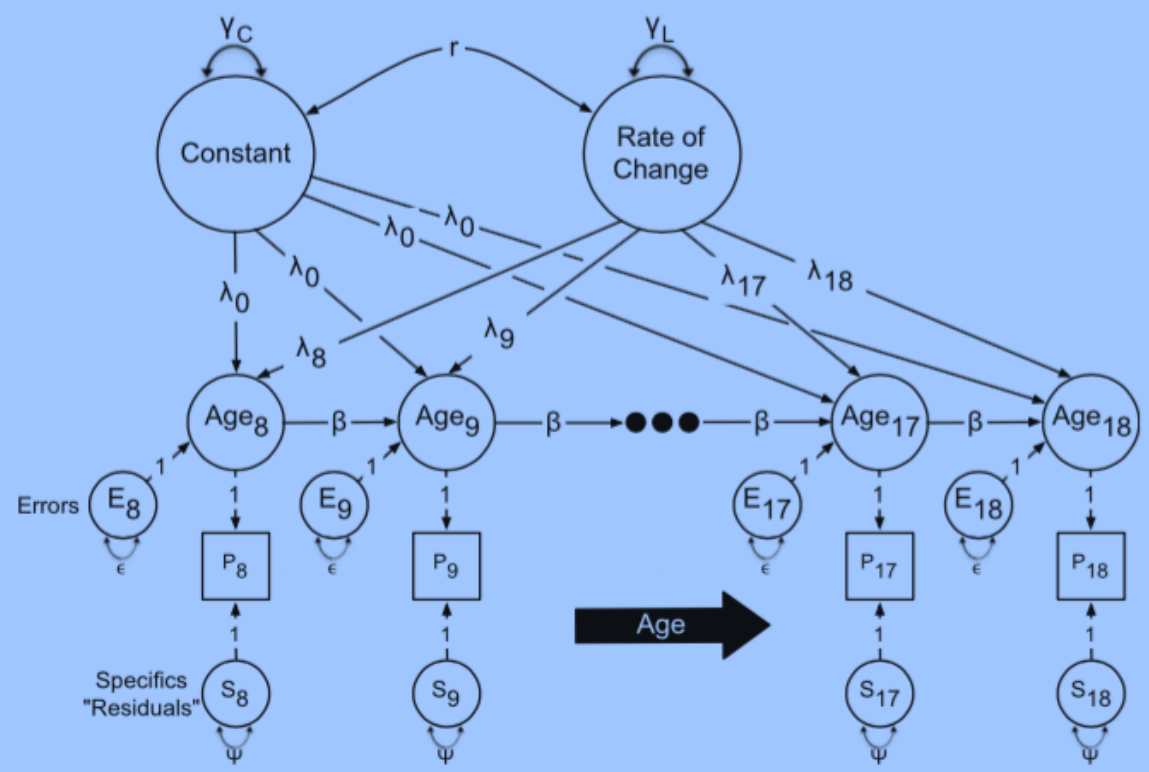

Fig. 3 Structural model of developmental change attributable to auto-regressive and growth curve components. *Note* The diagram includes both constant and "change" random effects on growth. The Model is easily elaborated to reflect higher order components of growth and can be applied to genetic or environmental components of developmental change or both

Dual Change Score model

Lisrel model (Jöreskog & Sörbom, 1996) to estimate expect covariance:

$$\Lambda \times (I-B)\sim \times (\Gamma \times (\phi) \times \Gamma' + \Psi) \times (I-B)\sim' \times \Lambda' + \epsilon$$

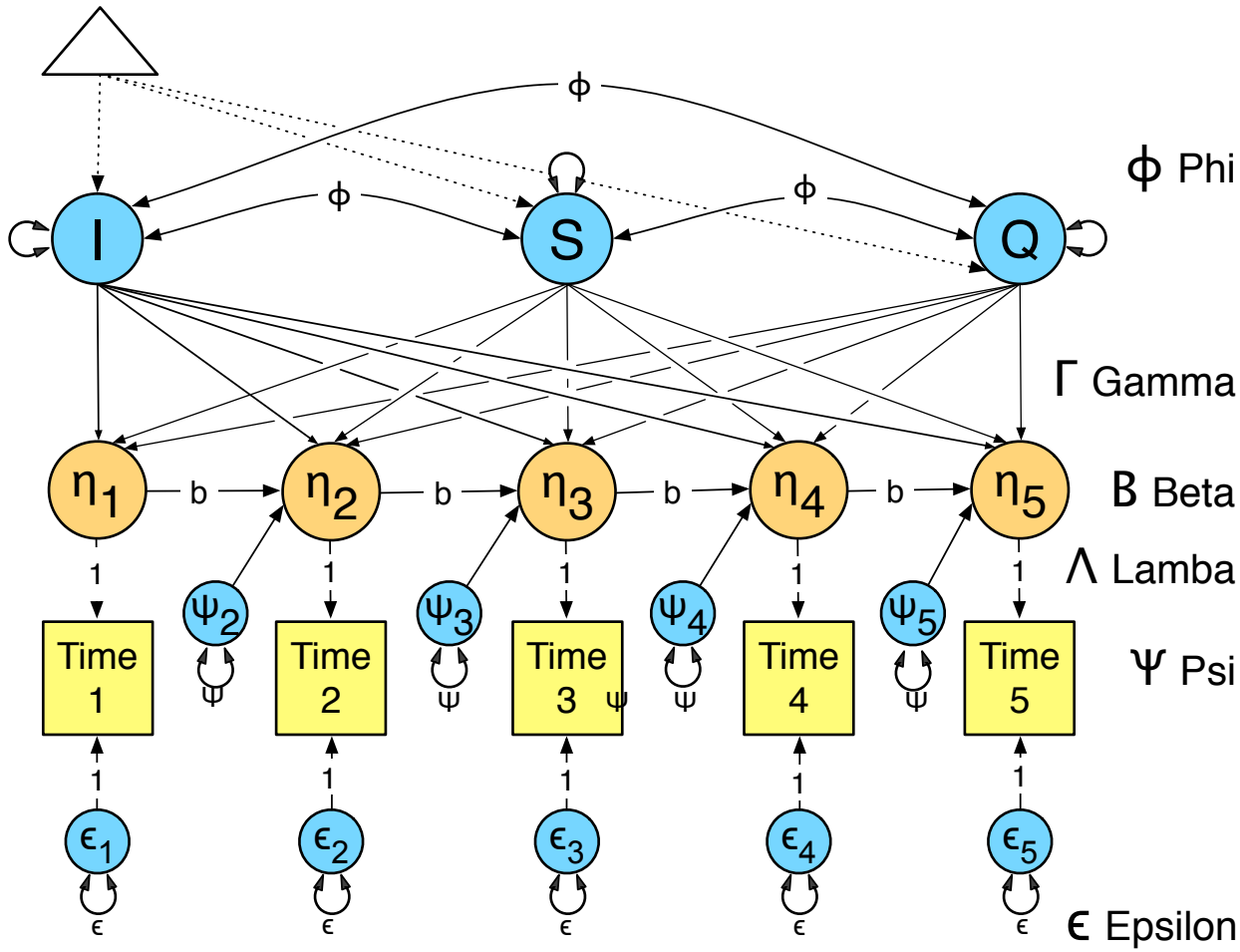

$$\Lambda * (I-B)\sim * (\Gamma * \phi \ \ \Gamma' + \Psi) * (I-B)\sim' * \Lambda' + \epsilon$$

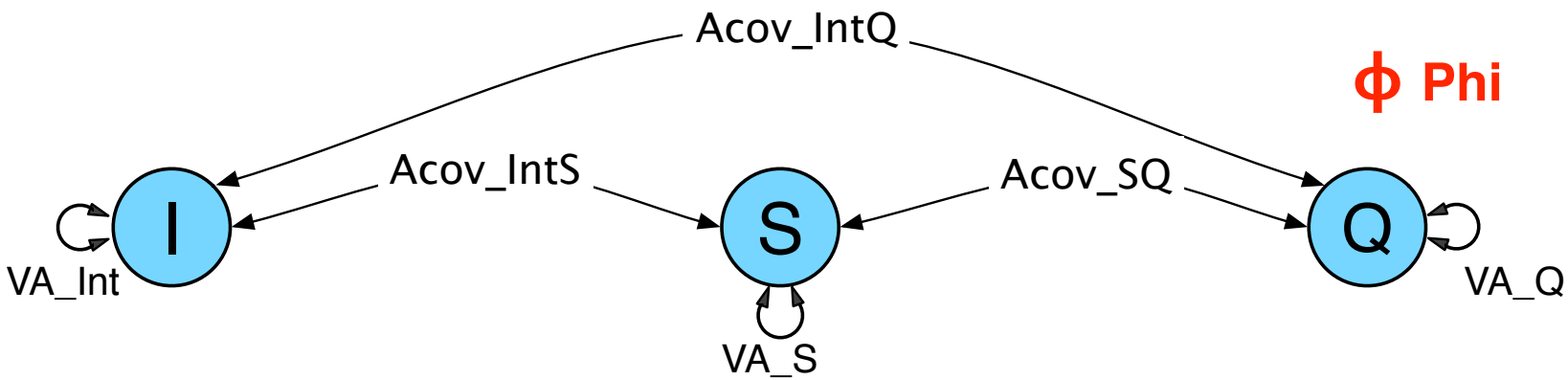


```
phiA_labs      <- c("VA_Int","Acov_IntS","Acov_IntQ","VA_S","Acov_SQ","VA_Q")
phiA           <- mxMatrix(type = "Symm", nrow = nGrow, ncol = nGrow, free = T, labels=phiA_labs, name = "phiA",
                   values = c( 0.9,
                               0.5,0.3,
                               0.5,0.5,0.2))
                SymmMatrix 'phiA'
                $labels
                     [,1]      [,2]      [,3]
                [1,] "VA_I"     "Acov_IS" "Acov_IQ"
                [2,] "Acov_IS" "VA_S"      Acov_SQ"
                [3,] "Acov_IQ" "Acov_SQ"  "VA_Q"
                $values
                     [,1] [,2] [,3]
                [1,]  0.9  0.5  0.3
                [2,]  0.5  0.5  0.5
                [3,]  0.3  0.5  0.2
```

$$\Lambda * (I-B)\sim * (\Gamma * \phi * \Gamma' + \Psi) * (I-B)\sim' * \Lambda' + \epsilon$$

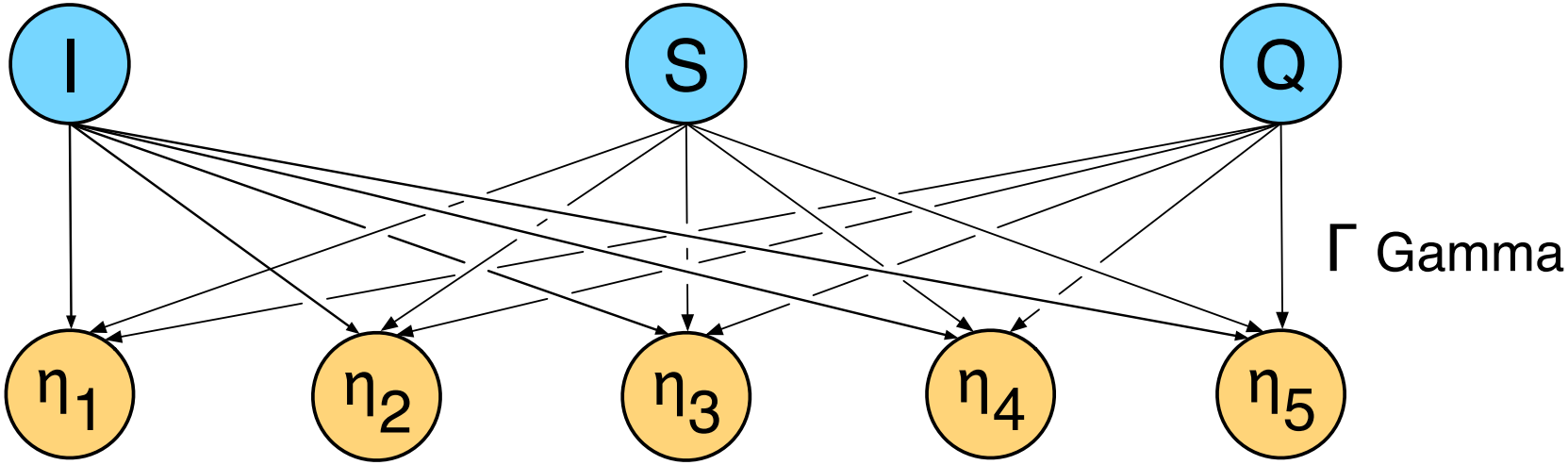


```
Glabs          <- c(paste("i",1:nvars,sep=""), paste("s",1:nvars,sep=""), paste("q",1:nvars,sep=""))
gamma          <- mxMatrix( type="Full", nrow=nFactors, ncol=nGrow, free=F, labels=Glabs, name="gamma",
                    values=c(1,1,1,1,1, -2,-1,0,1,2, 2,-1,-2,-1,2))

               FullMatrix 'gamma'
                    [,1] [,2] [,3]
               [1,] "i1" "s1" "q1"
               [2,] "i2" "s2" "q2"
               [3,] "i3" "s3" "q3"
               [4,] "i4" "s4" "q4"
               [5,] "i5" "s5" "q5"
               $values
                    [,1] [,2] [,3]
               [1,]    1   -2    2
               [2,]    1   -1   -1
               [3,]    1    0   -2
               [4,]    1    1   -1
               [5,]    1    2    2
```

$$\Lambda * (I-B)\sim * (\Gamma * \Phi \ \ \Gamma' + \Psi) * (I-B)\sim' * \Lambda' + \epsilon$$

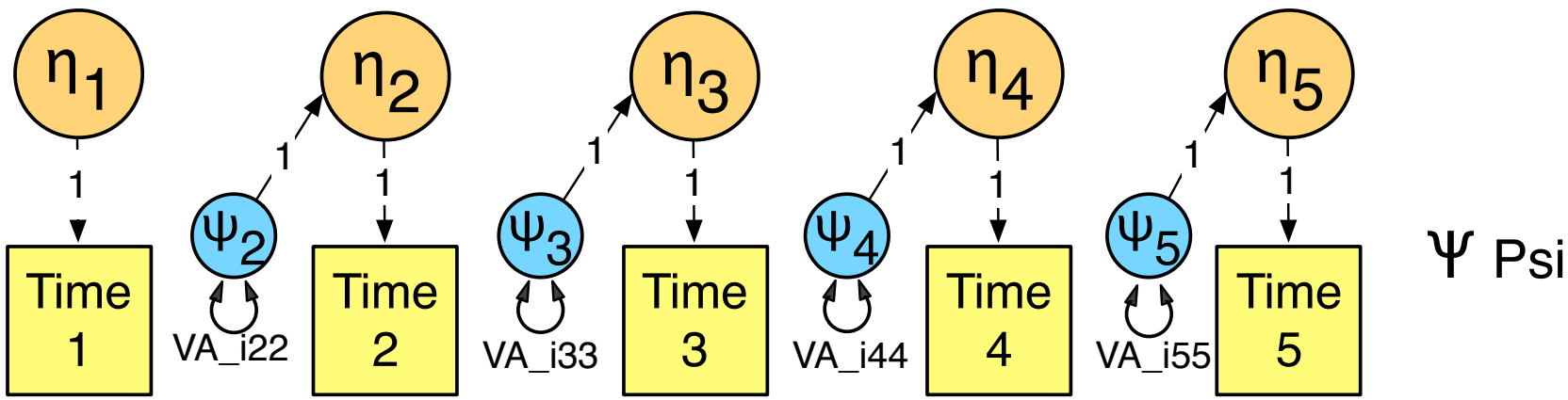


```
psiA_labs       <- c("VA_i11","VA_i22","VA_i33","VA_i44","VA_i55")
psiA            <- mxMatrix(type = "Diag", nrow = nFactors, ncol = nFactors, free = c(F,T,T,T,T), labels = psiA_labs, name = "psiA",
                                    values = c( 0,0.9,0.5,0.5,0.5))

 DiagMatrix 'psi_a'
 $labels
      [,1]     [,2]     [,3]     [,4]     [,5]
 [1,] "VA_i11" NA       NA       NA       NA
 [2,] NA       "VA_i22" NA       NA       NA
 [3,] NA       NA       "VA_i33" NA       NA
 [4,] NA       NA       NA       "VA_i44" NA
 [5,] NA       NA       NA       NA       "VA_i55"
 $values
      [,1] [,2] [,3] [,4] [,5]
 [1,]    0  0.0  0.0  0.0  0.0
 [2,]    0  0.9  0.0  0.0  0.0
 [3,]    0  0.0  0.1  0.0  0.0
 [4,]    0  0.0  0.0  0.1  0.0
 [5,]    0  0.0  0.0  0.0  0.1
```

$$\Lambda * (I-\mathbf{B})\sim * (\Gamma * \boldsymbol{\phi} * \Gamma' + \Psi) * (I-\mathbf{B})\sim' * \Lambda' + \epsilon$$

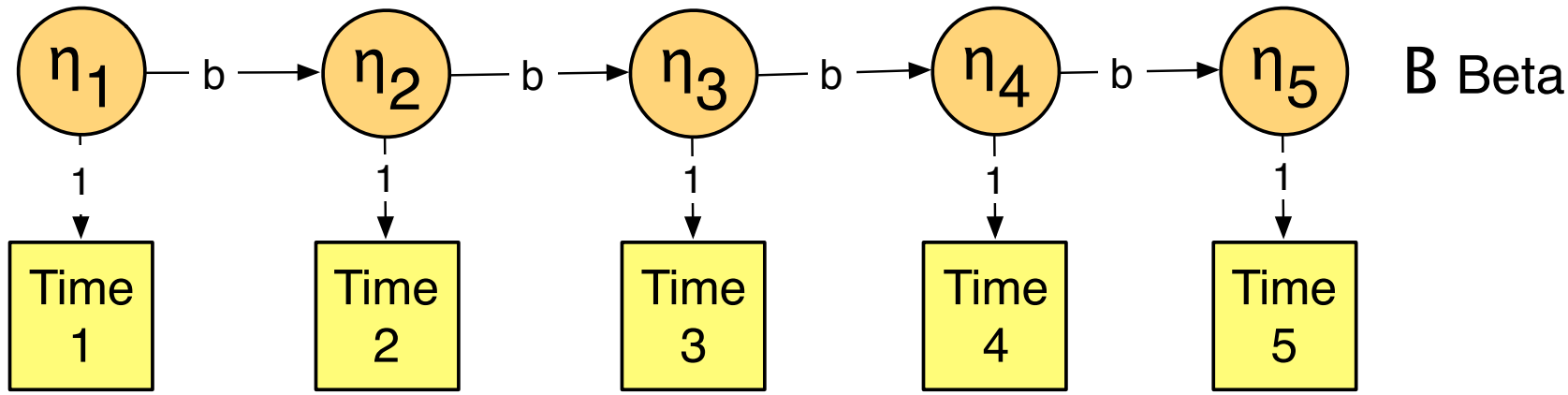

B Beta

```
beta        <- mxMatrix(type="Full", nrow = nFactors, ncol = nFactors, free = betaF, labels = betalab, values = betaS,name = "beta")

          FullMatrix 'beta'
          $labels
               [,1] [,2] [,3] [,4] [,5]
          [1,] NA   NA   NA   NA   NA
          [2,] "b"  NA   NA   NA   NA
          [3,] NA   "b"  NA   NA   NA
          [4,] NA   NA   "b"  NA   NA
          [5,] NA   NA   NA   "b"  NA
          $values
               [,1] [,2] [,3] [,4] [,5]
          [1,]  0.0  0.0  0.0  0.0    0
          [2,]  0.9  0.0  0.0  0.0    0
          [3,]  0.0  0.9  0.0  0.0    0
          [4,]  0.0  0.0  0.9  0.0    0
          [5,]  0.0  0.0  0.0  0.9    0
```

$$\Lambda \times (I-B)^{-1} \times (\Gamma \times \phi \times \Gamma' + \Psi) \times (I-B)^{-1\prime} \times \Lambda' + \epsilon$$

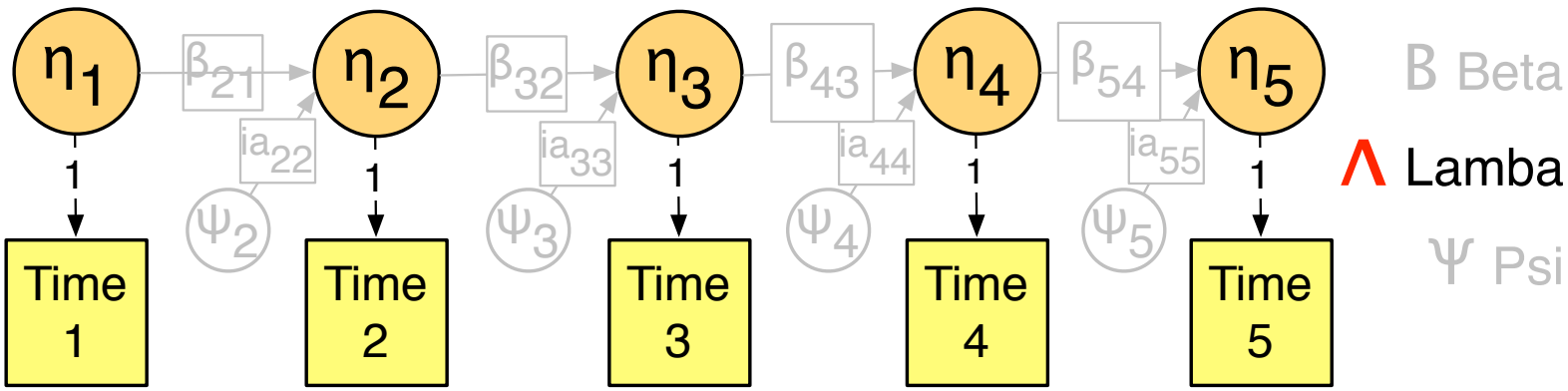


```
lamba   <- mxMatrix(type="Full",
            nrow = nVariables, ncol = nFactors,
            free = loadF, values = loadS,
            name = "lamba")
```

```
$values
     [,1] [,2] [,3] [,4] [,5]
[1,]    1    0    0    0    0
[2,]    0    1    0    0    0
[3,]    0    0    1    0    0
[4,]    0    0    0    1    0
[5,]    0    0    0    0    1
```

$$\Lambda \times (I-B)^{-1} \times (\Gamma \times \phi \times \Gamma' + \Psi) \times (I-B)^{-1\prime} \times \Lambda' + \epsilon$$

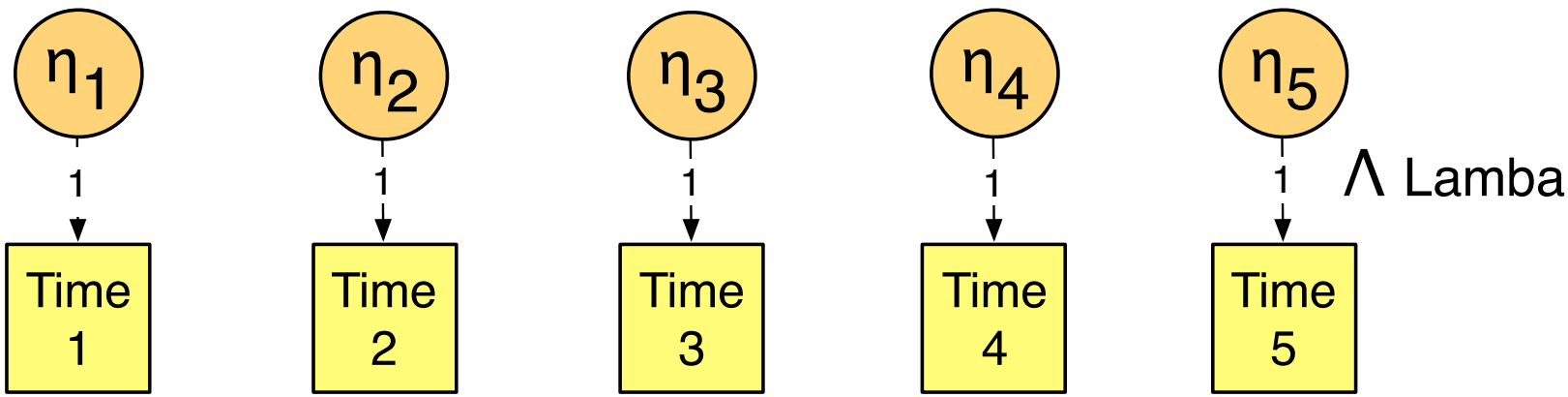


```
loadS      <- diag(nFactors)
loadF      <- F
lamba      <- mxMatrix(type="Full", nrow = nvars, ncol = nFactors, free = loadF, values = loadS, name = "lamba")

     FullMatrix 'lamba'
     $labels: No labels assigned.
     $values
          [,1] [,2] [,3] [,4] [,5]
     [1,]    1    0    0    0    0
     [2,]    0    1    0    0    0
     [3,]    0    0    1    0    0
     [4,]    0    0    0    1    0
     [5,]    0    0    0    0    1
```

$$\Lambda \times (I-B)^{-1} \times (\Gamma \times \phi \times \Gamma' + \Psi) \times (I-B)^{-1\prime} \times \Lambda' + \epsilon$$

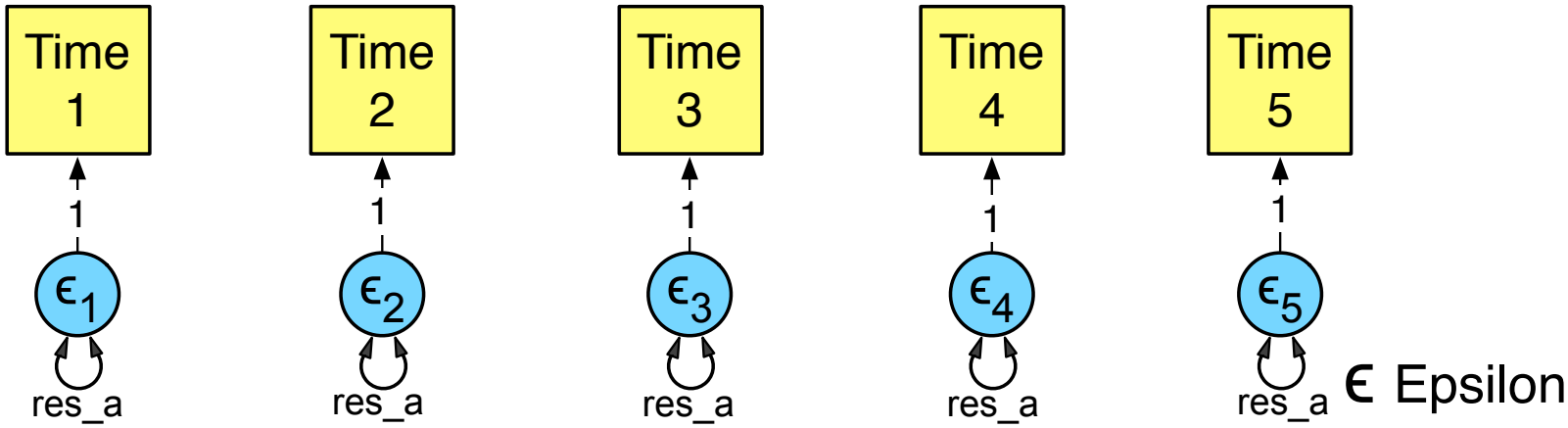


```
epsilon_a <- mxMatrix(type = "Diag", nrow = nvars, ncol = nvars, free = T, labels = "res_a", values = 1, name = "epsilon_a")

DiagMatrix 'epsilon_a'
$labels
     [,1]    [,2]    [,3]    [,4]    [,5]
[1,] "res_a" NA      NA      NA      NA
[2,] NA      "res_a" NA      NA      NA
[3,] NA      NA      "res_a" NA      NA
[4,] NA      NA      NA      "res_a" NA
[5,] NA      NA      NA      NA      "res_a"
$values
     [,1] [,2] [,3] [,4] [,5]
[1,]    1    0    0    0    0
[2,]    0    1    0    0    0
[3,]    0    0    1    0    0
[4,]    0    0    0    1    0
[5,]    0    0    0    0    1
```

$$\Lambda \times (I-B)\sim \times (\Gamma \times \phi \times \Gamma' + \Psi) \times (I-B)\sim' \times \Lambda' + \epsilon$$

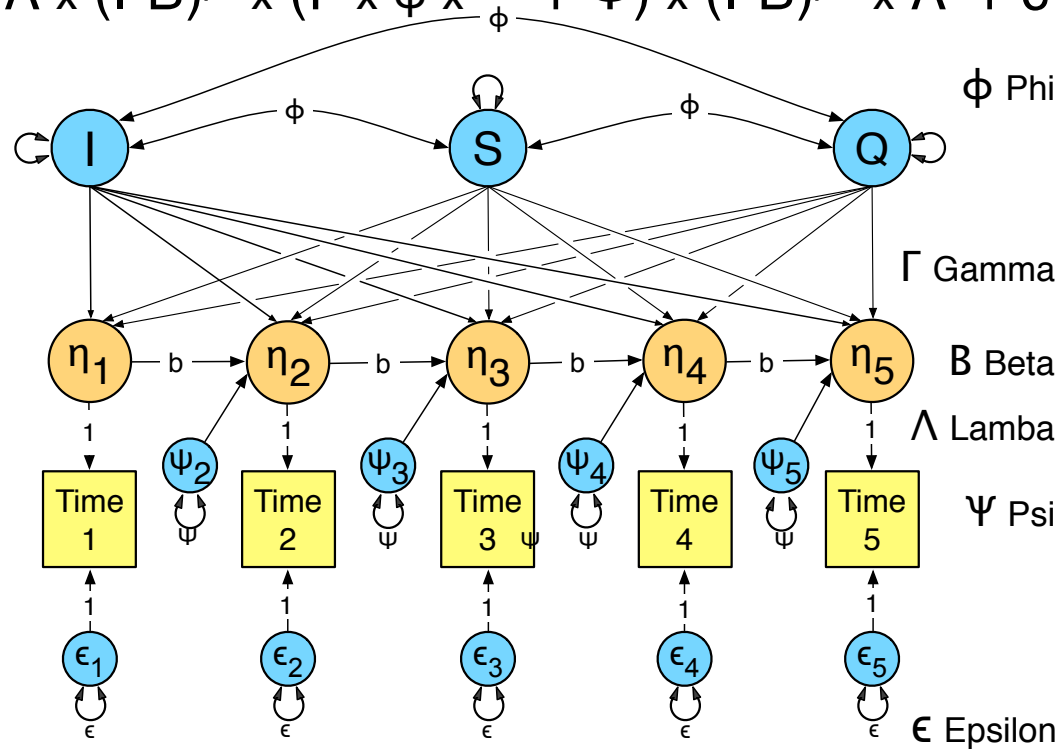


```
# Expected variance/covariance matrix
 # Λ * (I-B)~ * (Γ * ϕ ' Γ' + Ψ) * (I-B)~' * Λ' + ϵ
 # expCov    <- mxAlgebra(Λ %*% solve(I-B)%*% (Γ %*% ϕ %*% t(Γ) + Ψ) %*% t(solve(I-B))%*%t(Λ) + ϵ, name = "expCov")
 A           <- mxAlgebra(lamba %*% solve(I-beta)%*% (gamma %*% phiA %*% t(gamma) + psiA) %*% t(solve(I-beta))%*%t(lamba) + epsilon_a, name = "A")
 C           <- mxAlgebra(lamba %*% solve(I-beta)%*% (gamma %*% phiC %*% t(gamma) + psiC) %*% t(solve(I-beta))%*%t(lamba) + epsilon_c, name = "C")
 E           <- mxAlgebra(lamba %*% solve(I-beta)%*% (gamma %*% phiE %*% t(gamma) + psiE) %*% t(solve(I-beta))%*%t(lamba) + epsilon_e, name = "E")
 V           <- mxAlgebra( expression= A+C+E, name="V" )

 covMZ       <- mxAlgebra( expression= rbind( cbind(A+C+E, A+C),
                                              cbind(  A+C, A+C+E)), name="expCovMZ" )

 covDZ       <- mxAlgebra( expression= rbind( cbind(    A+C+E, 0.5%x%A+C),
                                              cbind(0.5%x%A+C, A+C+E)), name="expCovDZ" )
```

Means

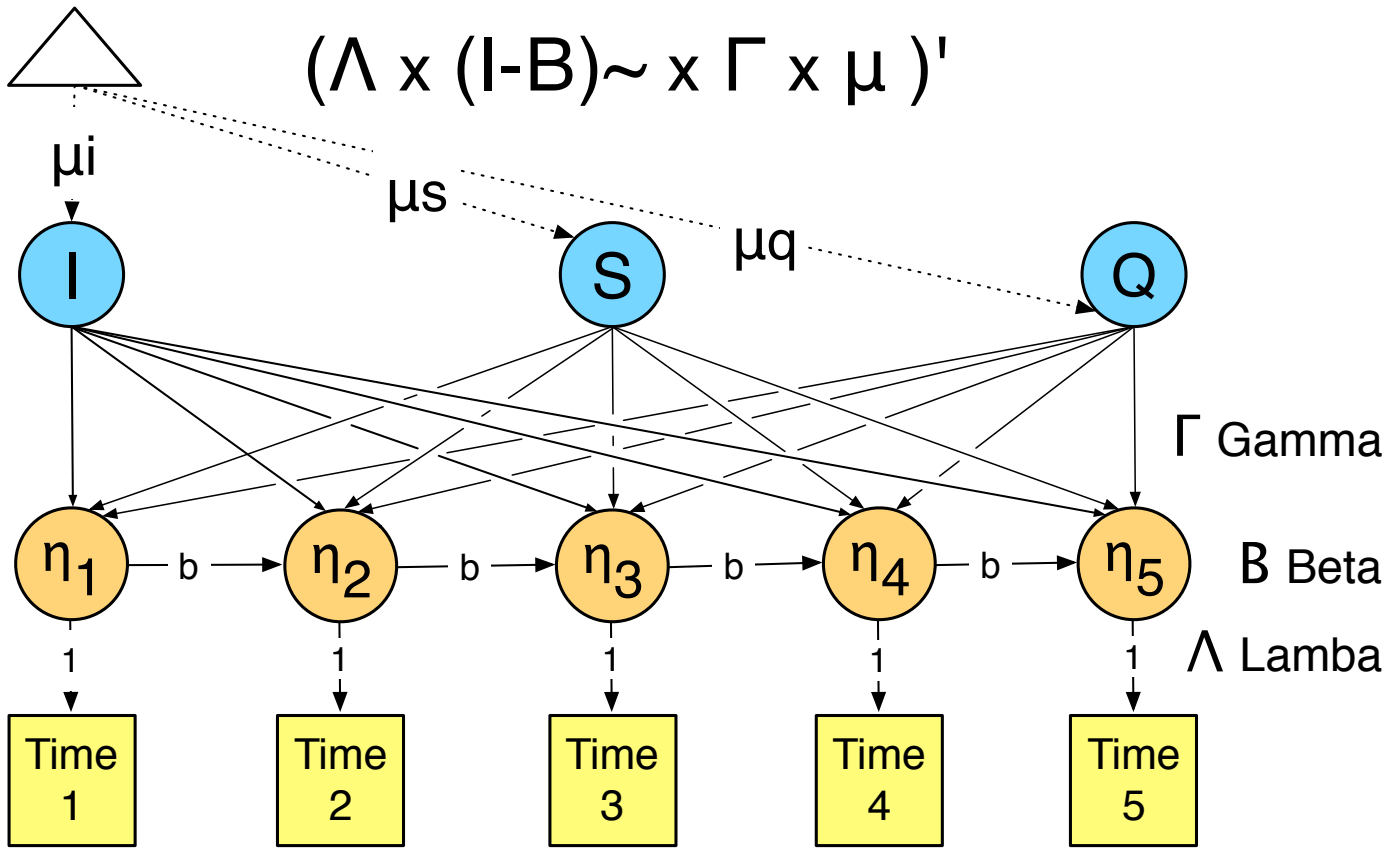


```
roMean    <- mxMatrix(type="Full", nrow = nGrow, ncol = 1, free = T,values = c(1.0,0.10,0.00), labels=c("ui","us","uq"), name = "GroMean")
acMean    <- mxAlgebra(solve(I-beta) %*% gamma %*% GroMean, name = "FacMean", dimnames = list(paste("F",1:5, sep=""),"FacMeans"))
anMean    <- mxAlgebra(t(lamba %*% FacMean), "ManMean")
xpMean    <- mxAlgebra( expression= cbind(ManMean, ManMean), name="expMean" ) # Expected means for twin pair
```

Practica
Dual_change_score_model.R

1. Run the full ACE DCS model
2. Run AE DCS model
3. Run CE DCS model
4. Compare models

5. Run a model with a latent growth process for A & autoregression process for E